YESNCER

YESNCER

NO.1 FAN COIL ONLINE SALES IN CHINA

R&D CAPABILITIES

YESNCER

www.yesncer.com

www.yuexinHVAC.com

Email: info@yesncer.com

No. 6, Third Industrial Park Road, Qingyuan District, Baoding City, Hebei Province, China

WeChat Official Account

Electronic Product Catalog

FAN COIL | PREMIUM WATER AC | CEILING UNIT | AIR HANDLING UNIT | FRESH AIR UNIT

YESNCER

CEILING-MOUNTED AIR HANDLING UNIT

Customized Air Handling Solutions

Adopts high-quality low-noise external rotor centrifugal fan



Energy saving
Low noise

Fast heating
& Cooling

Contractor
Recommended

Even
Airflow

Thickened
Material

CEILING-MOUNTED AIR HANDLING UNIT

Specificities & Product Features

PROFILE

The Yuexin KD(X) Series Ceiling-Mounted Air Conditioning Units are terminal air handling units for central air conditioning systems, designed for ceiling installation. They feature high-quality, low-noise external-rotor centrifugal fans, offering compact size and low noise levels. The units can perform air filtration, cooling and dehumidification, heating, enthalpy humidification, and fresh air intake. They are suitable for delivering conditioned air through ducts over certain distances, making them particularly ideal for small commercial and industrial building air conditioning projects.

This series of units comprises 13 models & 39 specs; air volume: 1500~15000m³/h, cooling: 8.4~324.8kW. The unit has an cream white appearance and comes with a nylon filter screen.The heat exchanger adopts 16 rows of full-dimpled high-efficiency fins. After mechanical tube expansion, the heat exchange efficiency is significantly improved.

It meets various requirements such as cooling, heating, humidification, and dehumidification. It is widely used in comfort-oriented applications including hotels, hospitals, shopping malls, and office buildings. It can also satisfy the needs of industries such as electronics, chemical, medical, pharmaceutical, tobacco, food, and light industry.

THERMAL-BRIDGE-PROOF FRAME

Insulation material is selected to prevent condensation and dripping under harsh conditions



UNIT CABINET WITH SEALED THERMAL INSULATION

Insulated steel plate, air leakage < 3%, insulation inside cabinet

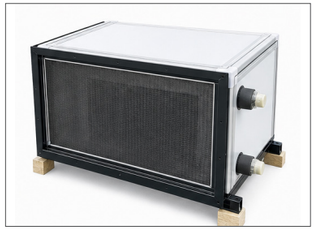

STABLE RAPID COOLING & HEATING

Powerful cooling at 7 ° C water, stable heating at 60° C water.



EXTERNAL ROTOR CENTRIFUGAL FAN

Precision-balanced fan ensures stronger power, smooth operation, low noise, low vibration, long air throw, and superior performance.



PRIMARY FILTER

The dedicated primary filter can be conveniently pulled out from either the left or right side of the unit for cleaning, and is capable of filtering out large particles.



CEILING-MOUNTED AIR HANDLING UNIT

Performance specifications

Main technical specifications											
Model	Nominal airflow m^3/h	ESP Pa			Fan			Weight kg			Noise dB(A)
		4 row	6 row	8 row	Type	Power kw	NO	4 row	6 row	8 row	
KD(X)-1.5	1500	270	220	170	Direct-driven external rotor centrifugal fan	0.25	1	45	50	55	60
KD(X)-2	2000	290	240	190		0.32	1	48	65	70	61
KD(X)-2.5	2500	330	280	230		0.45	1	65	70	75	63
KD(X)-3	3000	330	280	230		0.55	1	73	80	87	64
KD(X)-4	4000	290	240	190		0.32*2	2	100	110	120	68
KD(X)-5	5000	330	230	230		0.37*2	2	115	125	140	70
KD(X)-6	6000	330	280	230		0.45*2	2	123	135	152	72
KD(X)-7	7000	370	320	270		0.75*2	2	140	155	162	74
KD(X)-8	8000	390	340	290		1.1*2	2	155	170	185	76
KD(X)-10	10000	430	380	330		1.5*2	2	182	200	223	78
KD(X)-12	12000	450	400	350		1.5*2	2	220	240	270	80
KD(X)-13.5	13500	470	420	370		1.8*2	2	270	300	328	82
KD(X)-15	15000	500	450	400		2.2*2	2	305	330	355	84

Notes:

1. Left-hand and right-hand water connections can be interchanged on site. After adjustment, the cooling/heating capacity correction factor is 0.9.
2. Nominal cooling conditions: indoor dry-bulb/wet-bulb temperature (27/19.5 ° C), water inlet/outlet temperature (7/12 ° C). Nominal heating conditions: indoor dry-bulb temperature 21° C, water inlet temperature 60° C, with the same water flow as for cooling.
3. The noise value is the sound pressure level of the unit at high speed. Actual operating noise may vary due to environmental conditions. Tests are carried out in a semi-anechoic chamber.
4. Unit parameters are subject to the nameplate on the unit.

Configuration table			
Configuration		KD(X)-1.5/2/2.5/3/4/5/6/7/8/10/12/13.5/15	
Shell	Panel	30mm PU insulation panel	
	Frame	Support column	Extruded aluminum profile,corrosion resistant
		Connector	PVC material to avoid thermal bridge
Coil	Copper tube	Pure copper tube with 12.7mm diameter and 0.32mm wall thickness	
	Aluminum Fins	Hydrophilic fin, thickness 0.105mm,large louver,fin pitch2.8mm	
Fan	Fan impeller	Kruger low-noise centrifugal fan	
	Motor	Brand:Jiangyin Tuojin	
Filter		Removable primary filter screen for easy maintenance	
Drain pan		Integral fully enclosed drain pan. Condensation generated on the casing and the water inlet/outlet pipes will also flow into the drain pan (stainless steel optional).	

Dimension Table(Unit: mm)							
Mode		KD (X) - 1.5	KD (X) - 2	KD (X) - 2.5	KD (X) - 3	KD (X) - 4	KD (X) - 5	KD (X) - 6
A	Overall length	700	840	980	1120	1400	1680	1960
B	Thickness	500	500	500	500	500	500	500
C	Width	950	950	950	950	950	950	950
D	Air outlet spacing	-	-	-	-	620	700	760
E	Air Outlet Length	320	320	400	400	320	400	400
F	Air Outlet Width	200	200	200	250	200	200	250
Jet nozzle throat dia. (optional)		Φ 250	Φ 315	Φ 315	Φ 315	Φ 315X2	Φ 315X2	Φ 315X2
A1	Air Inlet Length	610	750	890	1030	1310	1590	1870
B1	Air Inlet Width	440	440	440	440	440	440	440
G	Header spacing	304	304	304	304	304	304	304
H	Header transverse spacing	4 row:99mm			6 row:165mm	8 row:231mm		
K	Connection pipe size	DN32	DN32	DN40	DN40	DN40	DN40	DN40
Power Supply		380V 3N / 50Hz						

Dimension Table(Unit: mm)							
Mode		KD (X) - 7	KD (X) - 8	KD (X) - 10	KD (X) - 12	KD (X) - 13.5	KD (X) - 15
A	Overall length	1960	1960	2080	2180	2340	2340
B	Thickness	550	650	650	740	780	810
C	Width	950	950	1100	1100	1100	1100
D	Air outlet spacing	760	900	900	900	900	1030
E	Air Outlet Length	400	500	500	500	500	630
F	Air Outlet Width	250	250	320	400	400	400
Jet nozzle throat dia. (optional)		Φ 315X2	Φ 350X2	Φ 350X2	Φ 400X2	Φ 400X2	Φ 500X2
A1	Air Inlet Length	1870	1870	1990	2090	2250	2250
B1	Air Inlet Width	490	590	590	680	720	750
G	Header spacing	380	418	494	570	608	684
H	Header transverse spacing	4 row:99mm			6 row:165mm	8 row:231mm	
K	Connection pipe size	DN40	DN50	DN50	DN50	DN50	DN50
Power Supply		380V 3N / 50Hz					

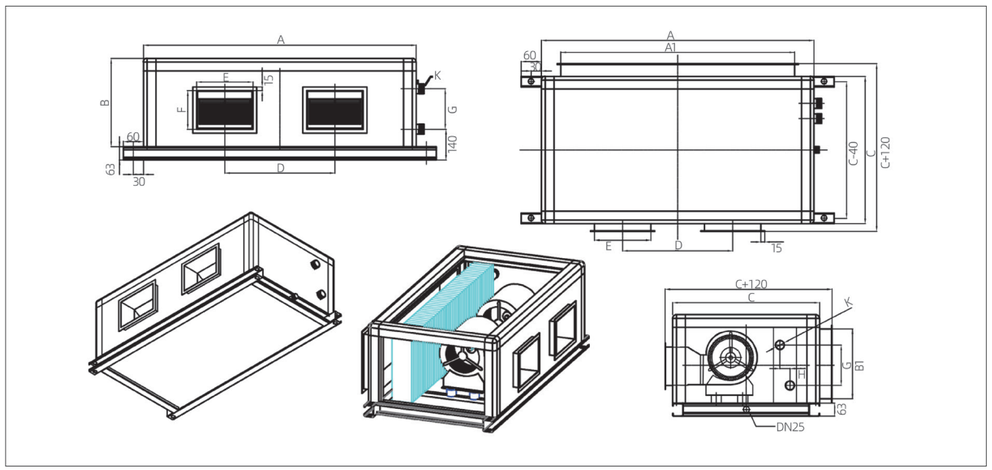

Heating Capacity(Fresh Air)										
Model	Airflow m^3/h	Heat Capacity KW			Water flow t/h			Water pressure drop kPa		
		4 row	6 row	8 row	4 row	6 row	8 row	4 row	6 row	8 row
KD(X)-1.5	1500	15.4	20.1	26	1.3	1.7	2.2	4	5.2	6.2
KD(X)-2	2000	20.5	26.8	34.7	1.8	2.3	3	5.6	6.8	7.2
KD(X)-2.5	2500	25.6	33.5	43.4	2.3	3	3.7	5.7	7.2	8.8
KD(X)-3	3000	30.8	40.2	52.1	2.6	3.5	4.5	10.2	11.5	14
KD(X)-4	4000	39	53.7	69.4	3.5	4.6	6	14	16.6	23
KD(X)-5	5000	51.2	67	86	4.4	5.8	7.5	17	18	30
KD(X)-6	6000	61	80	99	5.3	6.9	8.9	8.5	12.9	19
KD(X)-7	7000	71.8	93	121	6.2	8.1	10.4	7.9	12	17.9
KD(X)-8	8000	82	107	138	7.1	9.2	11.9	8.5	12.9	19.3
KD(X)-10	10000	102	134	163	8.8	11.5	14.9	9.5	14.4	21.5
KD(X)-12	12000	123	161	202	10.6	13.8	17.9	10.2	15.5	23
KD(X)-13.5	13500	138.5	181	214	11.9	15.6	20	11	19	23.8
KD(X)-15	15000	153	201	248	13.2	17.3	22.4	12.1	21	27.5

Note:Inlet water 60℃ , Δ T=10℃ ,inlet air DB Temp. 7℃

Heating Capacity(Return Air)										
Model	Airflow m^3/h	Heat Capacity KW			Water flow t/h			Water pressure drop kPa		
		4 row	6 row	8 row	4 row	6 row	8 row	4 row	6 row	8 row
KD(X)-1.5	1500	12.5	18	21.2	1.5	1.9	2.3	4.2	5.6	6.9
KD(X)-2	2000	17.8	25	29.5	1.9	2.3	2.9	5.5	6.8	7.2
KD(X)-2.5	2500	21.8	30	36.1	2.3	2.9	3.5	5.7	7.2	8.8
KD(X)-3	3000	26.1	35	44.2	2.9	3.5	4.2	7.9	8.9	9.9
KD(X)-4	4000	34.8	50	59	3.5	4.2	5.5	9.2	13.6	18.6
KD(X)-5	5000	43.6	60	73.7	4.2	5.4	6.7	9.9	13.9	20.2
KD(X)-6	6000	52.3	70	88.4	5.2	6.2	7.6	10.5	16.7	23.8
KD(X)-7	7000	66	84	103.2	6	7.3	11.9	10	15.9	22.3
KD(X)-8	8000	72	96	117	7.5	9	12.5	10.5	16.7	23.8
KD(X)-10	10000	87.1	110	149.4	8.7	9.8	12.7	9.5	15	16.7
KD(X)-12	12000	104.5	140	176	9	11.7	15.2	9.9	13.9	20.2
KD(X)-13.5	13500	117.6	150	199	11.8	13.2	19.6	10.5	16.7	23.8
KD(X)-15	15000	130.7	180	221	13	15.7	22	11	18.5	24.5

Note:Inlet water 60℃ , Δ T=10℃ ,inlet air DB Temp. 15℃

Cooling Capacity(Fresh Air)										
Model	Airflow m^3/h	Cooling Capacity KW			Water flow t/h			Water pressure drop kPa		
		4 row	6 row	8 row	4 row	6 row	8 row	4 row	6 row	8 row
KD(X)-1.5	1500	15.4	20.1	22.2	3.5	3.7	3.8	12.3	15.3	18.6
KD(X)-2	2000	20.5	26	34.7	4.7	5.7	6.6	12.6	15.9	12.5
KD(X)-2.5	2500	25.6	33.5	45.4	5.8	7.1	8.2	12.9	16.5	18.2
KD(X)-3	3000	30.8	40.2	52.1	7	8.5	9.85	19.9	27.7	30.6
KD(X)-4	4000	39.9	53.7	69.4	9.25	11.3	14.9	23.6	29.7	44
KD(X)-5	5000	51.3	67.1	86.6	11.4	14.1	18.2	22.8	32	57.3
KD(X)-6	6000	68.8	86.9	126	13.9	16.9	20.8	27.3	42.1	76.1
KD(X)-7	7000	81.9	101.1	135.3	17.3	21.8	25.5	34.2	39.3	62.2
KD(X)-8	8000	92	110	145.2	20.1	24.1	27.2	36.5	42.5	57.9
KD(X)-10	10000	114	147.2	170.2	21.6	26.3	32.5	33.9	47.5	59.7
KD(X)-12	12000	146.9	173.7	201	25.2	32.6	37.2	35.5	51	64.4
KD(X)-13.5	13500	164	198	215	30	38.3	42.2	38.8	56	70.4
KD(X)-15	15000	190	211.4	240	33.5	42.5	47.2	41	60	70.5

Note:Water in7, Δ T=5,inlet airDB35℃ , WB 28℃

Cooling Capacity(Return Air)										
Model	Airflow m^3/h	Cooling Capacity KW			Water flow t/h			Water pressure drop kPa		
		4 row	6 row	8 row	4 row	6 row	8 row	4 row	6 row	8 row
KD(X)-1.5	1500	8.4	10	11.3	1.6	2.11	2.62	6.8	10.1	11.8
KD(X)-2	2000	11.2	15	19.5	1.92	2.62	3.38	7.2	11.9	13
KD(X)-2.5	2500	13.9	18	24.6	2.39	3.26	4.25	7.6	12.5	14.2
KD(X)-3	3000	16.8	22	29.5	2.87	3.91	7.06	8.1	12.8	15.8
KD(X)-4	4000	22.1	30	39.39	3.8	5.2	7.76	9.2	13.5	18.7
KD(X)-5	5000	27.6	37	49.1	4.76	6.5	8.4	9.8	13.6	20.1
KD(X)-6	6000	33.26	45	60.9	5.73	7.81	8.76	10.4	16.6	23.8
KD(X)-7	7000	47.6	50	71.4	8.2	10	12.1	10.6	16.7	24.2
KD(X)-8	8000	49.6	60	82.6	8.6	10.3	13.2	12.5	18.5	25.3
KD(X)-10	10000	57.6	78	93.9	9.9	13.5	16.1	14.3	19.5	26.5
KD(X)-12	12000	69.6	88	112.5	12	15.1	19.3	14.9	23.2	28.5
KD(X)-13.5	13500	78.3	95	126.4	13.5	17	21.8	14.9	24.5	29.2
KD(X)-15	15000	87	110	140.5	15	18.9	24.2	15.2	26.3	32

Note:Waterinlet 7, Δ T=5,return airDB 27℃ , WB 21℃

MODULAR AIR HANDLING UNIT

Customized Air Handling Solutions

Constant Temp & Humidity · Energy Efficient · Clean Fresh Air · Stable & Reliable



Fast heating & Cooling

Customize Acceptable

Contractor Recommended

Even Airflow

Thickened Material

MODULAR AIR HANDLING UNIT

Specificities & Product Features

PROFILE

Developed from years of central air conditioning manufacturing experience and advanced technologies, the Yuexin AHU offers mixing, filtering, cooling, dehumidification, and heating functions. It meets various high-capacity HVAC demands with multiple standard sizes, airflow from 3,000 to 250,000 m^3/h, and a maximum external static pressure of 2,000 Pa.

The Yuexin AHU is widely applicable to subways, exhibition centers, airports, shopping malls, hotels, restaurants, office buildings, theaters, stadiums, and industries including electronics, precision machinery, textiles, pharmaceuticals, food, petrochemicals, and tobacco.

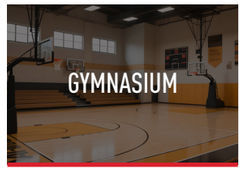







EU&US CERTIFIED SELECTION SOFTWARE

Built-in templates and a model database, developed from Yuexin's extensive modular AHU experience, meet dimensional requirements for various applications. Models can be directly accessed to accelerate selection.

Professional selection of key components like heat exchangers and fan motors automatically matches cost-effective models. Heat exchanger selection is certified to US standards.

A complete report is quickly generated, including technical parameters of each functional section, coil selection details, psychrometric chart with operating point, and dimensional drawings. The report authenticity is certified to European standards.

PROFESSIONAL DETAILED DESIGN

YESNCER's differential pressure gauge installation design uses stainless steel tubes instead of traditional plastic tubes, with rubber sealing sleeves at the connection points. This effectively solves the problems of air leakage and pointer jitter caused by insufficient strength of the connecting tubes.

NO THERMAL BRIDGE ANTI-RUST

High-pressure foamed insulation combined with sealing strips achieves a thermal bridge factor optimized to European standard EN1886 TB2 (TB1~TB5 grades). The wrapped sheet metal corners prevent rusting.

HIGH EFFICIENCY LOW CONSUMPTION

The cabinet's mechanical insulation performance reaches European standard EN1886 Class T2 (classes T1~T5), and the air leakage performance reaches Class L1 (classes L1~L3). Together with the America certified high-efficiency heat exchanger, it greatly reduces air and cooling leakage, saving operating costs.

AVIATION STRUCTURE ACCESS DOOR

The access door, designed using aerospace technology, is integrally foamed and molded. It features high strength and low deformation. The double-knife-edge sealing ensures no leakage. At the same time, a safety pressure relief device is provided to ensure safe operation of the access door.

MODULAR AIR HANDLING UNIT

Performance specifications

Function Sections of Modular AHU				
NO.	Name	Diagram	Length Dimension (N: standard module value)	Note
1	Mixing section		ZK3-(X)~ZK10-(X): 6N; ZK12-(X)~ZK40-(X): 9N; ZK50~ZK80: 10N; ZK100~ZK180: 16N; ZK200~ZK250: 18N	
2	Outdoor air & exhaust section	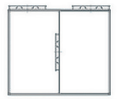	ZK3-(X)~ZK15-(X): 10N; ZK20-(X)~ZK40-(X): 12N; ZK50~ZK80: 16N; ZK100~ZK180: 18N; ZK200~ZK250: 22N	
3	Panel filter section		2N	Access section recommended upstream
4	Bag filter section		5N	Access section recommended upstream
5	Combination filter section		5N	Access section recommended upstream
6	Water baffle		8N	
7	Heating coil section		3N	
8	Electric heating section		3N	
9	Steam humidification section		6N	
10	Wet film humidification			Installed with coil; no separate space required
11	High-pressure micro-mist humidification		6N	Wet-membrane drift eliminator shall be provided
12	Fan section			Access section recommended upstream
13	Muffler section		Return Air: 8N; Supply Air: 13N	
14	Flow Equalizer Section		6N	
15	Intermediate Section		6N	

Comparison Table of Filter Efficiency Standards – China, USA, Europe																				
China GB/T14295	Primary ≥5μm 80% > efficiency ≥20%					Medium≥1μm 70% > efficiency ≥20%			HEPA ≥1μm 99% > efficiency ≥70%		Sub-HEPA ≥1μm 99.9% > efficiency ≥95%				HEPA ≥0.5μm efficiency ≥95%					
USA ASHRAE	C1	C2-C4	L5	L6	L7	L8	M9	M10	M11	M12	M13			H12-H16				VH17	VH18	VH19	VH20
Europe (New Standard)	G1 65%	G2 80%	G3 80-90%		G4 >90%		F5 40%		F6 60%		F7 80%	F8 90%	F9 85%	F10 95%	F11 99%	F12 99.9%		H13 90.95%		H14 99.985%	V15-V17 99.995%
Europe Europe (Old Standard)	EU1	EU2	EU3		EU4		EU5		EU6		EU7	EU8	EU9	EU10		EU11		EU12	EU13	EU14	

Heating Performance Data (Standard Conditions)													
Model	Airflow m^3/h	4 rows				6 rows				8 rows			
		Heating Capacity KW	A.P,D	W.P,D	Water flow m^3/h	Heating Capacity KW	A.P,D	W.P,D	Water flow m^3/h	Heating Capacity KW	A.P,D	W.P,D	Water flow m^3/h
ZK3	3050	25.5	93	5.5	2.2	34.8	159	6.7	3	39.9	200	7.4	3.4
ZK4	4016	34.1	94	7.3	2.9	46.5	158	10.4	4	52.6	221	7.4	4.5
ZK5	5020	42.7	88	9.8	3.7	58.1	172	12.8	5	65.7	220	9.6	5.7
ZK6	6186	51.1	90	9.8	4.4	69.7	176	11.1	6	81	232	10.4	7
ZK8	8025	68	91	11.8	5.8	92.9	168	13.1	8	105.1	233	9.6	9
ZK10	10068	85.2	101	12.8	7.3	116.2	178	14.4	10	131.9	235	11.8	11.3
ZK12	12134	102.2	96	16.2	8.8	139.3	181	14.9	12	158.9	232	11.1	13.7
ZK15	15075	128.9	96	15.8	11.1	174.2	176	18.5	15	197.4	230	13.9	17
ZK20	20082	169.8	98	13.9	14.6	231.8	180	17.3	19.9	263	233	16.1	22.6
ZK25	25025	212.5	108	17	18.3	289.7	188	19.6	24.9	327.7	232	17.4	28.2
ZK30	30060	256.4	105	18.5	22	302.4	176	20.2	26	393.7	232	15	33.8
ZK35	35350	299.1	105	17.3	25.7	355.6	181	18.3	30.6	463	229	16.3	39.8
ZK40	40156	339.6	95	20.1	29.2	404	172	20.9	34.7	525.9	231	17.6	45.2
ZK50	50562	426.7	109	21.3	36.7	508.7	178	22.6	43.7	662.2	239	15.4	56.9
ZK60	60280	510.9	108	20.1	43.9	606.4	175	24.2	52.1	789.5	234	15.4	67.6
ZK80	80156	677.7	109	24.8	58.2	806.4	191	26.3	69.3	1049.8	231	17.4	90.2
ZK100	100260	870.1	106	29.7	74.8	1008.6	181	31	86.7	1313.1	234	17.9	112.8
ZK120	121056	1048.4	109	32.5	90.1	1217.8	173	34.3	104.6	1585.4	239	17.4	136.2
ZK140	140862	1221.3	110	37	104.9	1417.1	178	38.8	121.8	1844.8	229	19.5	158.6
ZK160	161236	1394.3	105	42.9	119.8	1622	172	45.3	139.4	2111.7	236	21.6	181.4
ZK180	180650	1561.6	102	48.1	134.2	1817.4	181	52.7	156.1	2365.9	234	21.7	203.3
ZK200	201260	1673.2	102	57	143.8	2024.7	181	63.5	174	2635.8	233	25.5	226.5
ZK220	222152	1840.5	105	57	158.1	2234.9	173	69.8	192	2909.5	237	24.7	250
ZK250	251892	2091.5	108	63.8	179.7	2534	180	79.3	217.7	3298.8	239	32.5	283.4

Note:

1.Standard conditions: Entering air DB temp. 15° C.

2.Entering water temp. 60° C, ΔT=10°C .

Heating performance data (Fresh Air Conditions)

Model	Airflow m^3/h	4 rows				6 rows				8 rows			
		Heating Capacity KW	A.P,D	W.P,D	Water flow m^3/h	Heating Capacity KW	A.P,D	W.P,D	Water flow m^3/h	Heating Capacity KW	A.P,D	W.P,D	Water flow m^3/h
ZK3-X	3050	29.8	93	6.5	2.6	40.7	159	7.9	3.5	46.7	200	7.6	4.1
ZK4-X	4016	39.9	94	8.7	3.4	54.5	158	12.4	4.7	61.5	221	8.8	5.3
ZK5-X	5020	49.9	88	11.7	4.3	68	172	15.2	5.8	76.9	220	11.4	6.6
ZK6-X	6186	59.8	90	11.7	5.1	81.6	176	13.2	7	94.8	232	12.3	8.1
ZK8-X	8025	79.5	91	14	6.8	108.7	168	15.5	9.3	123	233	11.5	10.6
ZK10-X	10068	99.6	101	16.3	8.6	136	178	17.1	11.7	154.3	235	14.1	13.3
ZK12-X	12134	119.6	96	19.2	10.3	163	181	17.7	14	185.9	232	13.2	16
ZK15-X	15075	150.8	96	18.9	13	203.8	176	22.1	17.5	231	230	16.5	19.9
ZK20-X	20082	198.6	98	16.5	17.1	271.2	180	20.6	23.3	307.7	233	19.1	26.4
ZK25-X	25025	248.6	108	20.2	21.4	339	188	23.4	29.1	383.5	232	20.7	33
ZK30-X	30060	299	105	22.1	25.8	353.8	176	24	30.4	460.6	232	17.8	39.9
ZK35-X	35350	350	105	20.5	30.1	416.1	181	21.8	35.8	541.7	229	19.5	46.5
ZK40-X	40156	397.3	95	23.9	34.1	472.6	172	24.9	40.6	615.3	231	21	52.9

Note:

1.Fresh air condition: Inlet air DB temp. 7° C.

2.Entering water temp. 60° C, ΔT=10℃ .

Cooling performance data (Standard Conditions)

Model	Airflow m^3/h	4 rows				6 rows				8 rows			
		Heating Capacity KW	A.P,D	W.P,D	Water flow m^3/h	Heating Capacity KW	A.P,D	W.P,D	Water flow m^3/h	Heating Capacity KW	A.P,D	W.P,D	Water flow m^3/h
ZK3	3050	16.9	12.6	103	6	2.9	23	15.4	179	7.3	4	25.5	16.4
ZK4	4016	22.6	16.9	104	7.9	3.9	30.8	20.6	178	11.4	5.3	34.8	21.6
ZK5	5020	28.3	21.2	98	10.7	4.9	38.5	25.8	192	13.9	6.6	43.5	27
ZK6	6186	33.8	25.4	100	11.5	5.8	46.2	30.9	196	12.1	7.9	53.7	33.3
ZK8	8025	45	33.8	101	12.9	7.7	61.5	41.2	188	14.2	10.6	69.6	43.2
ZK10	10068	56.4	42.3	111	14	9.7	77	51.6	198	15.7	13.2	87.3	54.1
ZK12	12134	67.7	50.8	106	17.6	11.6	92.3	61.8	201	16.2	15.9	105.2	65.3
ZK15	15075	85.3	64	106	18	14.7	115.4	77.3	196	20.2	19.8	130.8	81.1
ZK20	20082	112.4	84.3	108	18.3	19.3	153.5	102.8	200	18.8	26.4	174.2	108
ZK25	25025	140.7	105.5	118	18.5	24.2	191.9	128.5	208	21.4	33	217.1	134.6
ZK30	30060	169.8	127.3	115	20.2	29.2	200.3	134.2	196	22	34.4	260.7	161.6
ZK35	35350	198.1	148.6	115	21	34.1	235.5	157.8	201	20	40.5	306.8	190.1
ZK40	40156	224.9	168.7	105	21.9	38.7	267.5	179.2	192	22.8	46	348.3	215.9
ZK50	50562	282.9	211.9	119	23	48.6	336.9	225.7	198	24.6	57.9	438.6	271.9
ZK60	60280	338.4	253.8	118	21.9	58.2	401.6	269.1	195	26.4	69.1	522.8	324.2
ZK80	80156	448.8	336.6	119	27.1	77.2	534	357.8	211	28.6	91.8	695.2	431
ZK100	100260	576.2	432.2	116	32.4	99.1	668	447.5	201	33.7	114.9	869.6	539.1
ZK120	121056	694.3	520.7	119	35.4	119.4	806.5	540.4	193	37.4	138.7	1050	651
ZK140	140862	808.8	606.6	120	40.3	139.1	938.5	628.8	198	42.2	161.4	1221.7	757.5
ZK160	161236	923.4	692.6	115	46.8	158.8	1074.2	719.7	192	49.4	184.7	1398.5	867
ZK180	180650	1034.2	775.7	112	52.3	177.9	1203.5	806.4	201	57.4	207	1566.8	971.4
ZK200	201260	1108.1	831.1	112	62.1	190.6	1340.9	898.4	201	69.1	230.6	1745.6	1062.3
ZK220	222152	1218.9	914.2	115	65.2	209.6	1480	991.6	193	76	254.5	1926.8	1194.6
ZK250	251882	1385.1	1038.8	118	69.5	238.2	1678.1	1124.3	200	86.4	288.6	2184.7	1354.5

Note:

1.Standard conditions: Entering air DB temp. 27° C,WB temp. 19.5° C

2.Chilled water inlet/outlet temp. 7° C/12° C.

Cooling Performance Data (Fresh Air Conditions)

Model	Airflow m^3/h	4 rows				6 rows				8 rows			
		Heating Capacity KW	A.P,D	W.P,D	Water flow m^3/h	Heating Capacity KW	A.P,D	W.P,D	Water flow m^3/h	Heating Capacity KW	A.P,D	W.P,D	Water flow m^3/h
ZK3-X	3050	24.5	18.4	113	12.8	4.2	33.6	22.5	189	16.2	5.8	43.6	27
ZK4-X	4016	32.4	24.3	114	13.1	5.6	43.7	29.3	188	21.5	7.5	57.6	35.7
ZK5-X	5020	40.8	30.6	108	14.8	7	55.7	37.3	202	22.3	9.6	72.7	45.1
ZK6-X	6186	49	36.8	110	13.2	8.4	67	44.9	206	25.1	11.5	87.2	54.1
ZK8-X	8025	65.4	49.1	111	16.3	11.2	90.9	60.9	198	30.7	15.6	116.3	72.1
ZK10-X	10068	88.2	66.2	121	18.4	15.2	112.2	75.2	208	34.5	19.3	156.9	97.3
ZK12-X	12134	105.8	79.4	116	19.6	18.2	134.6	90.2	211	37.3	23.2	188.3	116.7
ZK15-X	15075	134.2	100.7	116	20.2	23.1	170.9	114.5	206	40.8	29.4	238.7	148
ZK20-X	20082	180.4	135.3	118	20.2	31	244.2	163.6	210	23.7	42	320.9	199
ZK25-X	25025	226.8	170.1	128	22.5	39	304.7	204.1	218	31.1	52.4	403.5	250.2
ZK30-X	30060	262.9	197.2	125	24.8	45.2	366.3	245.4	206	36.5	63	476.7	295.6
ZK35-X	35350	306.7	230	125	25.4	52.7	427.4	286.3	211	36.5	73.5	556.2	344.8
ZK40-X	40156	357.1	267.8	115	26.9	61.4	487.3	326.5	202	36.8	83.8	635.4	393.9

Note:

1.Standard conditions: Entering air DB temp. 35° C,WB temp. 28° C

2.Chilled water inlet/outlet temp. 7° C/12° C.